ITEM NO.	PART NUMBER	DESCRIPTION	DESCRIPTION 2	QTY
1	FB-144-4000-2	BEAM, PULTRUDED STOCK	SERIES 4000 x 144 in, GRAY	1
2	TG0813-0053	BUSHING	13/16 in x 5-1/4 in	3
3	TG0813-0054	BUSHING	13/16 in x 3-1/4 in	6
4	FOAM	-	-	1
5	EC40-0006-2	END CAP	SERIES 4000, GRAY	2
6	DM-0006	MOUNT ASSEMBLY, DEADEND	4KLH	1
7	HB0750-0003	HEX BOLT	3/4 in - 10 x 6 in	2
8	HB0750-0006	HEX BOLT	3/4 in - 10 x 8 in	1
9	LW0750-0001	LOCK WASHER	3/4 in	5
10	HN0750-0001	HEX NUT	3/4 in - 10	2
11	SW0813-0005	SQUARE WASHER	13/16 in, 4 in x 3/8 in	5
12	EN0750-0002	EYE NUT	3/4 in - 10	5
13	TR0750-0003	THREADED ROD	3/4 in - 10 x 9-1/2 in	2

PUPI®
www.pupicrossarms.com

REVISIONS				
ECO	REV.	DESCRIPTION	DATE	INITIALS
	1.1	REDRAWN IN SOLIDWORKS	2013-03-26	RAF
1402	1.2	UPDATE DRAWING FORMAT	2016-02-04	RAF
3617	1.3	ADD LOAD RATINGS	2017-09-18	AJH
6498	1.4	UPDATE DRAWING FORMAT	2023-12-07	IAB

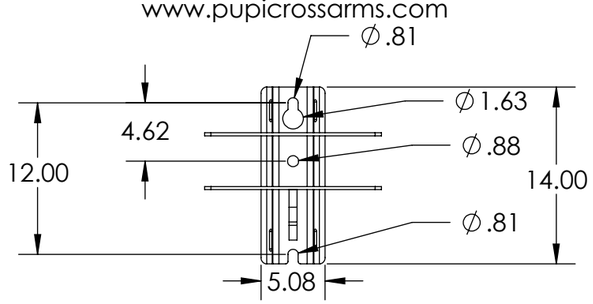

DETAIL -A-
SCALE 1:12

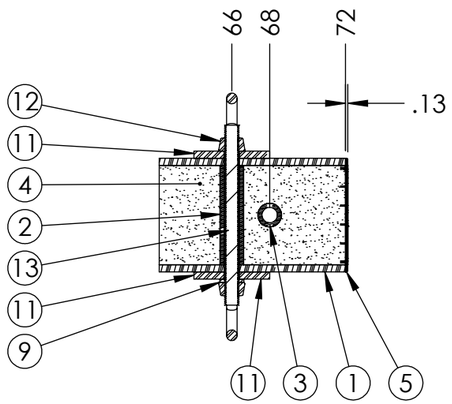

SECTION A-A
SCALE 1 : 8

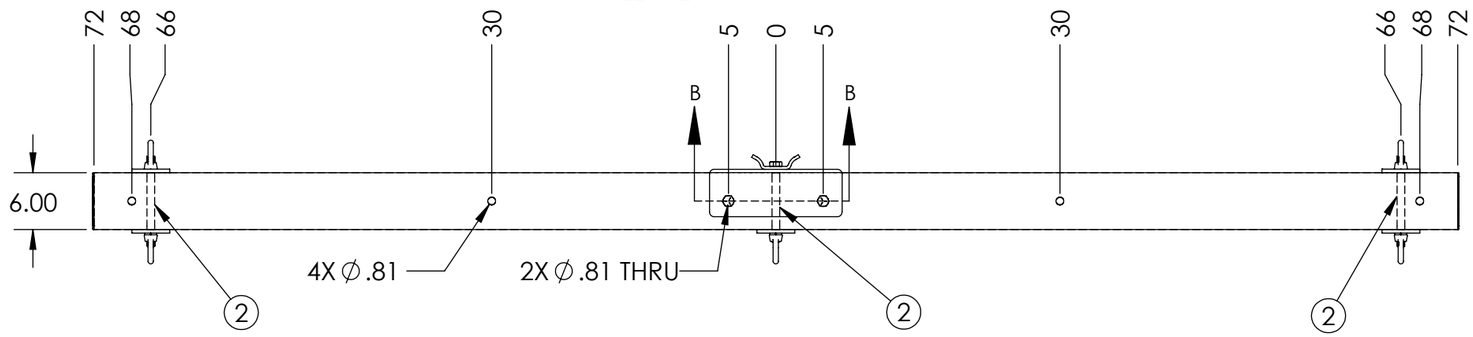

SEE DETAIL -A-

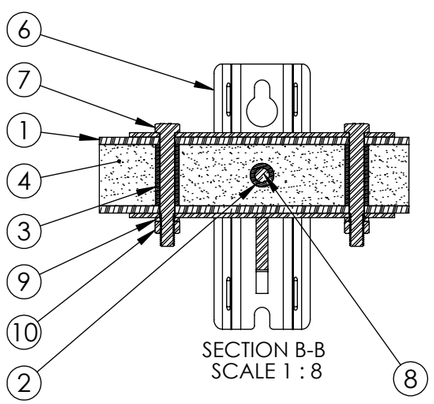

SECTION B-B
SCALE 1 : 8

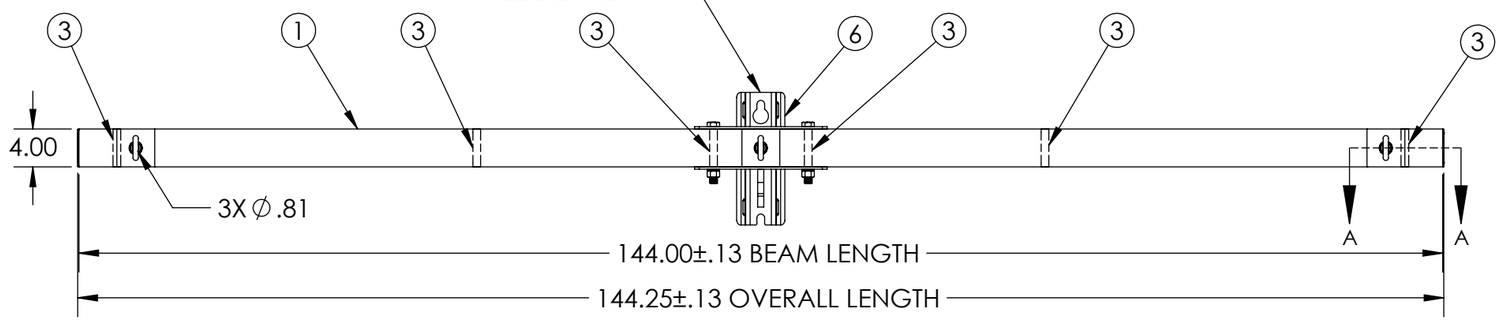

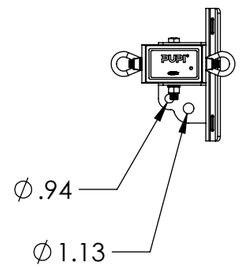

1.3 1.4

NOTES:
1. CENTER OF MOUNT HOLE(S) TO HOLES TOLERANCE ±0.06
2. CALCULATED AVERAGE ULTIMATE VERTICAL LOAD = 6,000 LBS PER WIRE, 3 WIRES
3. CALCULATED AVERAGE ULTIMATE LONGITUDINAL LOAD = 12,750 LBS PER WIRE, 3 WIRES
4. CALCULATED AVERAGE ULTIMATE TRANSVERSE LOAD = 12,750 LBS PER SIDE
5. GEOTEK RECOMMENDS MAXIMUM APPLIED LOAD PER WIRE DOES NOT EXCEED 50% OF THE AVERAGE ULTIMATE STRENGTH PER WIRE OF THE CROSSARM.

---UNLESS OTHERWISE SPECIFIED---
DIMENSIONS ARE IN INCHES
INTERPRET DIM AND TOL PER ASME Y14.5-2009
ANGULAR: MACH ±2°
BEND ±2°
ONE PLACE DECIMAL ±0.1
TWO PLACE DECIMAL ±0.02

PROPRIETARY AND CONFIDENTIAL
THE INFORMATION CONTAINED IN THIS DRAWING IS THE SOLE PROPERTY OF GEOTEK. ANY REPRODUCTION IN PART OR AS A WHOLE WITHOUT THE WRITTEN PERMISSION OF GEOTEK IS PROHIBITED.

CUSTOMER SIGNATURE: DATE:

STATE:	RELEASED	2023-12-18
DRAWN:	RAF	2013-03-26
CHECKED:	AJH	2023-12-08
APPROVED:	IAB	2023-12-18

REPLACES: DA4000-144E3-SPX

THIRD ANGLE PROJECTION

1.4

-REFERENCES-
pupicrossarms.com/warranty
geotek.com/termsandconditions

GEOTEK
A Whole New World of Composites
1421 SECOND AVE NW
STEWARTVILLE, MN 55976
(800) 533-1680
www.geotek.com

DESCRIPTION:
DEADEND ASSEMBLY, SERIES 4000
144 in, PUPI SPX

1.2

SIZE:	DWG. NO.	BEAM COLOR:	REV:
B	DA4000144E3SPX2	GRAY	1.4
SCALE: 1:16	WEIGHT: 106 LBS		SHEET 1 OF 1